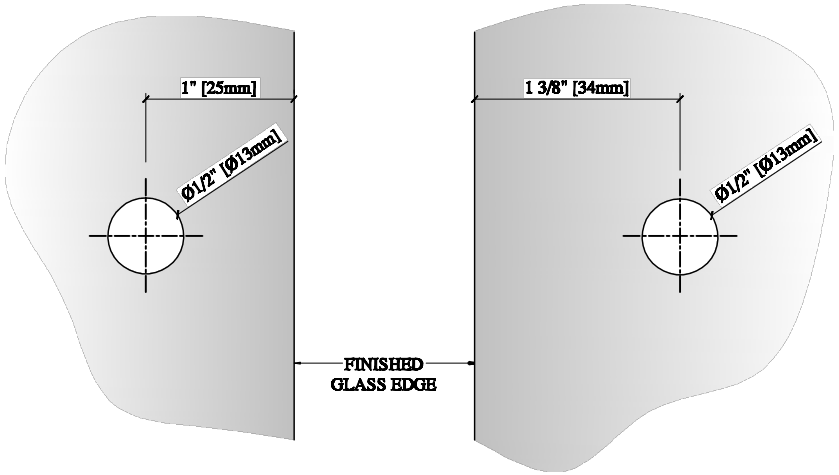

FIXED SIDE
GLASS FABRICATION

PIVOT SIDE
GLASS FABRICATION

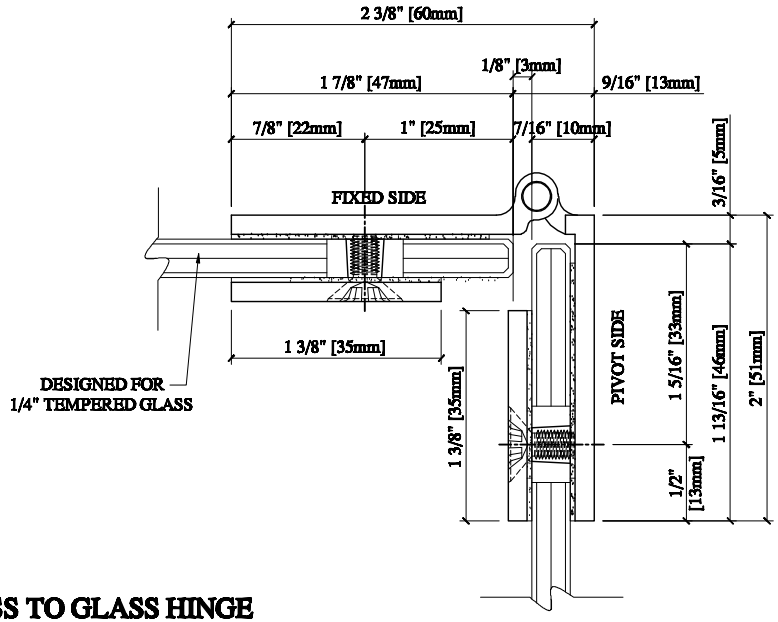

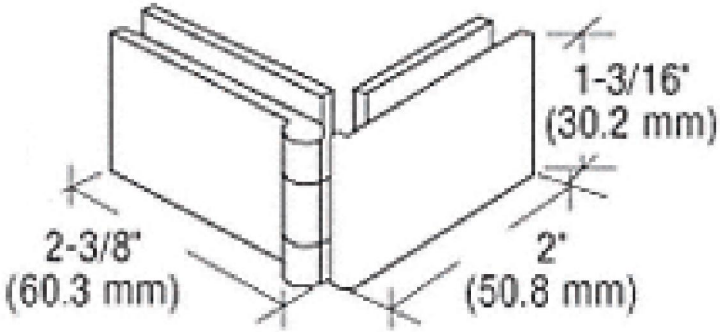

90 DEG. GLASS TO GLASS HINGE
ASSEMBLY DETAIL USED FOR:

CATALOG NUMBER	FINISH
EH136	CHROME
EH138	BRASS

THE MAXIMUM RECOMMENDED DOOR WIDTH IS 18" (457mm)
AND A MAXIMUM WEIGHT OF 24 lbs. (10.9 kg)

**ALWAYS USE DIMENSIONS SHOWN ON THE PLAN.
DO NOT SCALE OR DIMENSION ACTUAL DRAWING
TO ENSURE ACCURACY**

C.R.LAURENCE CO.
ARCHITECTURAL PRODUCTS
PH: 800-421-6144 FX: 800-262-3299
WWW.CRLAURENCE.COM

DESCRIPTION: 90 DEGREE GLASS TO GLASS SHOWCASE HINGE

USED FOR 1/4"(6mm) THICK GLASS

CAT. NO: (SEE CHART)		DATE: 02/02/09	
FILE NAME: EH136		SCALE: N.T.S.	
DRAWN BY: R.P.A.	CHECKED BY: C.H.	SHT 1 OF 1	